tanked. It is a function of the protruding length of the stem, known as stem extension, and the pedestal height relative to the top arch of the mounting cup.

Stem heights are influenced by the cup contour (flat or conical), the stem extension and the method of production. When a valve is crimped under ordinary conditions the stem height rises approximately 0.040″ (1.0 mm). Adding pressure to the can causes a trace of upward pedestal distortion and stem gasket compression, totalling around 0.007″ (0.18 mm); another 0.008″ (0.20 mm) or so is added during hot-tanking. When the can cools back to ambient conditions, a relaxation of about 0.005″ (0.13 mm) takes place. The result of all these increments is an overall stem height increase of about 0.050″ (1.3 mm) during production.

Many valve suppliers offer valve stems in three or four lengths, plus the option of using either a flat or conical cup as a means of roughly matching the stem heights required by these special actuator fitments. The vertical difference between flat and conical cups is approximately 0.100″ (2.54 mm), although this will vary with particular designs. In addition, the filler has the option of using "keepers" on his gassing equipment which act to limit the height of the pedestal and therefore the valve stem. With all these options, the filler can usually produce the desired stem height within about ±0.020″ (0.5 mm). This is considered satisfactory.

Stem height is checked during production using either a "go/no-go" stepped gauge block or a special dial micrometer. Keeper adjustments may have to be made occasionally, if the range starts to drift significantly. The suppliers of foam spouts, actuator domes and other fitments should always be asked to stipulate the required stem height specification in writing, so that appropriate valve cups and stems can be selected for the development program.

Valve Body

For a male, vertical-acting valve, the basic function of the valve body (sometimes called the housing or the spring cup) is to provide an enclosure for the spring to force the base of the stem up against the valve stem gasket. It may also be provided with a tailpiece orifice and perhaps a vapor-tap orifice, and serves to make a connection with the dip tube. Valve bodies are generally molded of the same plastics as stems, using large, multi-cavity injection machines.

The tailpiece or main housing orifice extends from about 0.010 to 0.260″ (0.25 to 6.60 mm) in diameter. In special cases there is no orifice as such, but large slots or channels, as in the Seaquist Valve Company NS-29 aerosol valve assembly, designed for bag or piston type dispensers. The larger orifices are designed for viscous products. In many cases, the dip tube is inserted into the tailpiece entryway and may or may not preempt the need for a tailpiece orifice. In the Seaquist NS-24 capillary valve assembly, any of six different capillary dip tubes may be inserted. The entry is chamferred for highly reliable machine insertion, and a circular barb or molded-in locking ring makes it almost impossible for the dip tubes to be separated. The capillary tubes have i.d.s of from 0.018 to 0.060″ (0.46 to 1.52 mm) and can thus function as a lower or "tailpiece" orifice, if one is needed.

Vapor-tap orifices are used commonly to add a small amount of vapor phase propellent to the liquid stream, which acts to give a finer break-up, a lower delivery rate and a warmer spray. As an example, many antiperspirants use vapor-taps in order to reduce spray rates without reducing the other orifice sizes and taking the risk of clogging the valve with the aluminum salt. Vapor-taps are bored through either the body wall or the shoulder area near the base. They are either molded in or drilled by Laser to sizes which range from 0.010 to 0.030″ (0.25 to 0.76 mm). Holes down to 0.005″ (0.13 mm) have been made by Laser equipment but clog easily and in tests with whipped creams and certain other products did not seem to provide any significant benefit. Vapor-tap holes of 0.008″ (0.20 mm) are probably available on a special order basis from some suppliers.

On some occasions, a vapor tap orifice is used in the reverse sense to provide a suitable spray with the dispenser in the inverted position. In this case, the body orifice becomes the vapor tap orifice. Feminine hygiene sprays often apply this principle. It is desirable to have both the tailpiece and vapor tap orifices about the same size, or the spray upon inversion of the container will be either faster or slower than that in the upright position.

Valve bodies have often been described as "regular" and "pressure-filling". In the past this meant that the regular valve was able to be gassed only at the rate propellent could pass through the valve stem and stem orifice(s), then through the body orifice(s) and into the can. If the valve stem orifice happened to be an 0.013″ (0.33 mm) size, even at extremely high propellent pressures approaching 1200 psig (8.27 MPa), it would still

require many seconds to inject reasonable amounts of gas into cans. By a redesign of the valve body, the first pressure-filling valves were made (in the late 1950s) and these allowed the liquid propellent to flow into the valve body not only through the stem but around it as well, due to a rather profound displacement of the center portion of the stem gasket. Special buttons were developed for these valves. Some had tiny legs on the underside, so that they could not press hard up against the top of the pedestal and cut off the flow of propellent around the stem; others had one or two vertical holes to carry propellent into a cavity at the bottom of the button, and then down along the stem, while the skirt of the button (around the cavity) pressed against the pedestal.

These pressure-filling valves worked very well unless there happened to be a tailpiece restriction. Depending upon valve design, the tailpiece is almost always an "orifice" of sorts, leading into the dip tube. The unrestricted tailpiece bores are usually 0.062 to 0.080" (1.57 to 2.03 mm), and pressure-filling valves with such tailpieces can generally be gassed in less than one second. Difficulties arise, however, when the tailpiece contains a restricting orifice. Compared with an 0.080" (2.03 mm) tailpiece pressure-filling valve, one with a 0.025" (0.63 mm) tailpiece will take 5.10 times as long to gas, and for a 0.013" (0.33 mm) tailpiece the gassing period will be 22.9 times as long. Such problems can be solved by eliminating the tailpiece restriction, if practical, by gassing with a U-t-C machine, or by using a valve which can be gassed not only through the valve body but around it, as shown in Figure 4.

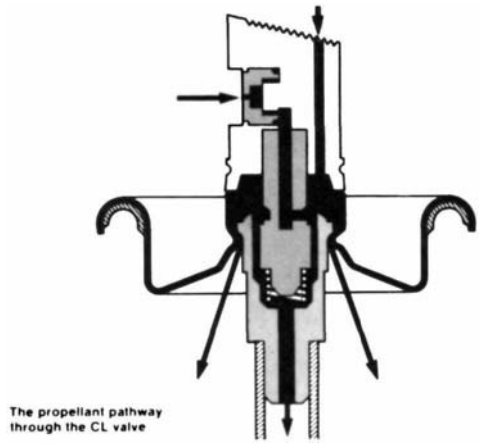

Figure 4. Model CL Valve
Illustrated is the Model CL Valve by Metal Box Limited, England. Arrows indicate the propellent pathway through the CL Valve. A faster model CLF became commercial in 1981. An essentially identical valve is offered by the Precision Valve Corporation. The Seaquist Valve Company offers similar models in both vertical and toggle-acting variations.

As mentioned earlier, the splined cup and hex-gasket variety of valve pressure-fills by the usual routes through the body, but propellent also passes over the top of the stem gasket and then downward past the eight-tine stake via special body slits or castellations and into the head space. Gassing time is usually less than one second, regardless of body orifices. The new Metal Box CLF valve is said to be even 33% faster than their CL type.

These valves probably will have somewhat less popularity in the U.S.A. and Canada because of the large numbers of U-t-C machines in use for moderate and high-speed production lines. However, the innovation should be well received in other parts of the world where T-t-V type gassing is very common.

Spring

The valve spring is one of the most reliable components of the aerosol package. It is made by winding the desired shape from wire of 0.016 to 0.035" (0.41 to 0.89 mm) diameter on high speed springmaking equipment. The spring is then generally heat treated to regain strength. The individual springs are coiled in a close, then wider, then close lengthwise fashion to prevent interlocking during high speed valve manufacture. In the U.S.A., practically all springs are now made from Grade 302 stainless steel, typically passivated at 160°F (71°C) in a 30% solution of nitric acid, HNO_3, and then washed and dried. Probably the 0.020" (0.51 mm) wire diameter is most common.

In a few instances other stainless steel alloys have been required, such as Grade 316, containing 2% molybdenum, and which resists attack by mildly acidic sulfate solutions and several other media. This type is sometimes called for in pharmaceutical products for added insurance against possible incompatibility with the formulation.

A few segments of the U.S.A. aerosol industry use hard drawn steel springs, and there is some interest in expanding this base, since the Grade 302 stainless springs are undoubtedly an overspecification for many anhydrous products. The savings would amount to about $0.50/M in 1982. Putting this into perspective,

for a marketer with a sales volume of 100,000 aerosols per year, the cost reduction would amount to $50. This small benefit would have to be weighed against the cost of any confirming laboratory work, paperwork and the infinitesimally small risk involved in the change.

Dip Tube

While the primary function of the dip tube is to transfer the liquid product to the valve body, it may sometimes also serve as a metering station and as a repository of product for inverted spraying. There are three general classifications according to diameter. The smallest are called capillary tubes and have bores of from 0.013 to 0.060" (0.33 to 1.52 mm), generally with an o.d. of 0.090" (2.29 mm). Then there are the standard size tubes, generally having an i.d. of about 0.125 to 0.150" (3.18 to 3.81 mm), which are probably used for over 75% of all U.S.A. aerosols. Finally, there are the macro-dip tubes, — sometimes sub-divided into large and jumbo sizes. The large size might include standard tubing of 0.165 and 0.194" (4.19 and 4.93 mm) i.d., whereas the jumbo tubes have i.d.s of typically 0.260 and 0.285" (6.60 and 7.24 mm). Most generally, the macro-dip tubes are used to hold a significant amount of product so that the aerosol can be inverted and still spray for many seconds. For example, a jumbo dip tube with an i.d. of 0.285" (7.24 mm) and an effective length of 8" (203 mm) can hold about 8.4 ml of product.

The standard dip tube is polyethylene, but high density polyethylene (HDPE) and polypropylene are used as well. Nylon has been used on rare occasions, sometimes for its clarity in clear glass aerosol products, and sometimes for its product resistance at unusually high temperatures. As an example, solutions containing corn oil (hot), turpentine and several other specific solvents cause polyethylenes to "melt" into a mush, but nylon is unaffected. At one time, polyethylenes were prone to stress-cracking after having been slipped over the tailpiece section of the valve body. This had the effect of creating a huge vapor-tap and rendered the finished aerosols almost useless. This problem has now been practically eliminated with the development of suitable plasticizing agents, used at about 20% of the total plastic composition.

Most suppliers cut the end of each dip tube with either a shallow notch or a slant configuration to prevent the remote possibility that it might jam directly against the bottom of the can and either partly or fully shut itself off. During gassing on a T-t-V basis, the dip tube tends to whip around and even one that will be cut on the short side can still form a shallow figure "S" and bind against the concave can bottom. Notched or slanted ends are good insurance in the case of aluminum monobloc cans or glass bottles.

In the extrusion operation, the tubing is wound directly onto large drums, causing it to take a permanent curvature. The suppliers take advantage of this by orienting the curvature to the direction of the button or to a directional dot placed on the rim of the valve cup for the purpose of having the consumer line up the button with the dot after purchase. This ensures that the bottom of the dip tube is within the liquid product even though the can may be tilted during use. This feature is quite important for starch and sizing products as well as paints. In the case of personal deodorants and a few other products, the tube may be curved 180° away from the direction of the button or dot. This is because the can is often tilted backwards during actuation.

About 1972, the U.S.A. aerosol industry agreed to designate the length of dip tubes according to the CSMA "A-D Dimension", which is the length from the top of the valve cup to the bottom of the dip tube, when it is held straight. Several valve suppliers provide customers with little plastic rulers designed to facilitate this measurement. Although the original proposal for standardizing dip tube length measurements originated with the F.E.A. in Europe, it is believed that the U.S.A. and Canada are the only countries that have adopted it across the board.

Like all plastics, dip tubes are affected by solvents. One of the most obvious effects is dimensional change. In almost every case, various degrees of swelling will result, although with polypropylene and anhydrous ethanol there is a small amount of shrinkage. There may be other examples of shrinkage, but they are rare. Like the elastomers, plastic dip tubes may reach an equilibrium state rather quickly, or may take months to do so. We have not been able to verify the widespread suggestion that about 90% of the swelling takes place in the first 24 hours of ambient storage. Table VI on page 168 shows the effect of 19 important aerosol solvents upon two different compositions of low-density polyethylene (LDPE) and polypropylene.

The two polyethylenes behave quite differently with certain solvents. The linear and diameter swelling levels bear only a general relationship to each other and

TABLE VI *Dip Tube Swelling When in Contact with Solvents*

(Temperature = 75°F or 24°C)

SOLVENT	TUBING MATERIAL	LINEAR SWELL (%) 1 Month	LINEAR SWELL (%) 3 Months	OUTSIDE DIAMETER SWELL (%) 1 Month	OUTSIDE DIAMETER SWELL (%) 3 Months
Acetone	LDPE - 1	0.0	0.0	1.1	1.1
	LDPE - 2	1.8	1.8	0.3	0.3
	PP	1.8	1.8	0.7	0.7
Methyl Ethyl Ketone	LDPE - 1	0.9	1.8	1.1	1.1
	LDPE - 2	1.8	1.8	0.3	0.3
	PP	0.9	0.9	1.5	1.5
Methyl Iso. butyl Ket.	LDPE - 1	0.9	0.9	1.7	2.3
	LDPE - 2	3.6	3.6	0.6	0.6
	PP	1.8	1.8	1.5	1.5
Methanol	LDPE - 1	0.0	0.0	0.0	0.0
	LDPE - 2	0.0	0.9	0.0	0.0
	PP	0.0	0.0	0.0	0.0
Ethanol (Anhydrous)	LDPE - 1	0.0	0.0	0.0	0.0
	LDPE - 2	0.0	0.9	0.0	0.0
	PP	-0.9	-0.9	0.0	0.0
Isopropanol	LDPE - 1	0.0	0.0	0.0	0.0
	LDPE - 2	0.0	0.0	0.7	0.7
	PP	-0.9	0.0	0.0	0.0
Iso. butane	LDPE - 1	2.7	3.6	3.4	5.7
	LDPE - 2	3.6	7.1	2.9	2.6
	PP	5.4	5.4	3.0	3.7
Isopar H (Exxon)	LDPE - 1	3.6	3.6	3.9	3.4
	LDPE - 2	5.3	6.3	1.6	1.6
	PP	0.0	4.5	0.7	3.7
VM&P Naptha	LDPE - 1	5.4	5.4	6.2	6.7
	LDPE - 2	8.9	8.9	3.9	3.9
	PP	6.3	6.3	5.2	5.2
Kerosene (20% Arom.)	LDPE - 1	2.7	3.7	3.9	3.9
	LDPE - 2	5.4	5.4	1.9	6.7
	PP	0.9	3.6	1.5	3.7
H.A.N. (80% Arom.)	LDPE - 1	4.5	5.4	4.5	4.5
	LDPE - 2	7.1	8.0	2.9	3.2
	PP	3.6	4.5	3.7	3.7
Toluene	LDPE - 1	5.4	5.4	6.2	6.2
	LDPE - 2	7.1	8.0	3.6	3.6
	PP	4.5	5.4	3.7	3.7
Xylenes	LDPE - 1	5.4	6.3	6.2	6.2
	LDPE - 2	7.1	8.9	3.6	3.6
	PP	6.3	6.3	3.7	3.7
P-11 (CCl_3F)	LDPE - 1	5.4	5.4	2.3	0.6
	LDPE - 2	7.1	8.9	2.9	3.6
	PP	7.1	7.1	6.0	6.0
P-12 (CCl_2F_2)	LDPE - 1	0.9	2.7	2.3	2.8
	LDPE - 2	3.6	3.6	0.6	2.3
	PP	3.6	3.6	2.2	3.0
Methylene Chloride	LDPE - 1	1.8	2.7	2.8	3.4
	LDPE - 2	5.4	5.4	1.9	1.9
	PP	4.6	3.6	3.0	3.0
1,1,1-Trichloroethane	LDPE - 1	4.5	4.5	5.1	5.1
	LDPE - 2	7.1	7.1	3.6	3.6
	PP	5.4	5.4	5.2	5.2
Perchloroethylene	LDPE - 1	8.0	8.0	8.5	8.5
	LDPE - 2	8.0	8.0	5.8	6.1
	PP	6.3	7.1	5.9	5.9
P-114 ($CClF_2 \cdot CClF_2$)	LDPE - 1	0.9	0.9	1.1	1.1
	LDPE - 2	1.8	1.8	0.7	0.7
	PP	1.8	3.6	1.5	1.5

often not even that. The one month and three month results are often significantly different.

In specific tests with a typical spray starch formulation, it was found that the swelling level seemed to be related to the 4% isobutane content, and not to the water and other ingredients, which had almost no effect. In one test, the maximum swelling appeared to occur after three days at 80°F (26.7°C) with a linear expansion of HDPE to 4.10%. After 31 days, the expansion was measured as 4.15%. However, the same product showed a range of 3.50 to 4.24% (3.72% average) when stored at 80°F (26.7°C) for 7 days. When stored at 120°F (48.9°C) for 7 days the range was 3.62 to 6.01%, with an average swelling of 4.85%. These findings point out a few of the pitfalls involved in dip tube swell tests.

Swelling of the dip tube may cause end-jamming (rare) and distortion, plus loosening of the connection to the valve body, if it fits over the tailpiece. In some cases, vapor may get into the liquid stream by aspiration, causing a slight vapor-tap effect. The usual procedure for avoiding these often minor consequences of swelling is to predetermine the amount of swell experimentally and allow for it in ordering the dip tube length.

Precision, Seaquist and perhaps other valve companies are able to mold a peripheral barb on the outside of the tailpiece (Seaquist can also provide this on the inside), which is of great help in maintaining the connection between the dip tube and the valve body. Major marketers variously specify that both regular and capillary dip tubes must have a removal force in the 6 to 7 pound (2.72 to 3.18 kg) range. This measurement is most commonly made with a spring-loaded dial-type force gauge. Another method involves slipping the valve cup, upside down, into an inverted "T" slot of a standard weight, and then pulling up very slowly on the dip tube to see if it separates. Most non-barbed connections can pass the test, but barbed junctions pass it with great ease. In fact, the dip tube usually elongates and breaks before the connection is broken.

Vertical Valve Assemblies

Valves can be assembled at 800 to 1000 units per minute on some lines, but most of them are much slower than that. One manufacturer is now installing a ten-head machine capable of applying gaskets to valve cups at the rate of about 780,000 units per day. The larger valve makers have single plants that often produce in excess of 2 million valves per day and have nameplate ratings much higher than that. Many valve-making facilities produce their own injection molded bodies, stems, actuators, cups and other items, bringing them together for assembly in one section of the plant.

In the U.S.A. the three largest manufacturers of vertical action valves are Precision Valve Corporation, Seaquist Valve Company and Summit Packaging Systems, Inc. The Precision Model 1-NN valve is said to come in over 10 million variations. It adapts to capillary, regular, macro and "no" dip tubes, simply by selecting the appropriate valve body. Their 32 standard stems divide into six series, each having a particular attribute, such as diameter, stepped profile, top metering slot, special sealing ring for suspension formulas and so forth. Within each series are stems having different height and/or orifice selections. Because of this design diversity, Precision valves can be used for almost every vertical action valve application.

The Seaquist Valve Company has conveniently divided their very extensive line into eight series of basic assembly types: four series of vertical-acting valves, two of the toggle-action valves and two of their female-type valves. In addition, with their recent purchase of certain assets from the Ethyl Corporation (ARC Division) to manufacture various series of aerosol can valves, the above product line will be expanded to include the AR series female-type valve, as well as various overcaps and accessories. A listing of the eight series and their individual valve assemblies is given in Table VII on Page 172.

The Summit Packaging Systems, Inc. firm also has a very extensive line of valve variables. They have elected to divide it into three basic constructions: their S-63 tilt-action valve, their S-73 vertical-acting unit and their CA-78 female-type valve. Each has its own retinue of components; for example, the S-73 has 11 stems covering two stem orifice height designs, and 36 bodies in two designs: the Series 23 for standard dip tubes and the Series 43 for capillary dip tubes.

While these three major suppliers have selected very different ways to organize and present their elaborate lines of aerosol valves and accessories, their catalogs are superb sources of information for the aerosol development man and should be kept readily available. In addition to product listings, these books also include a lot of very useful technical information: newsletters, reprints of magazine articles and specific valve recommendations for various aerosol formulation types, to name a few.

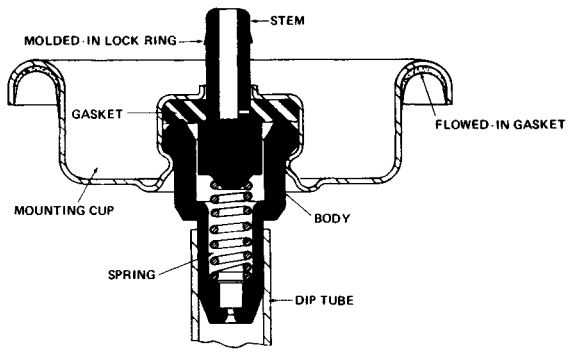

Figure 5. Seaquist NS-31 Aerosol Valve Assembly

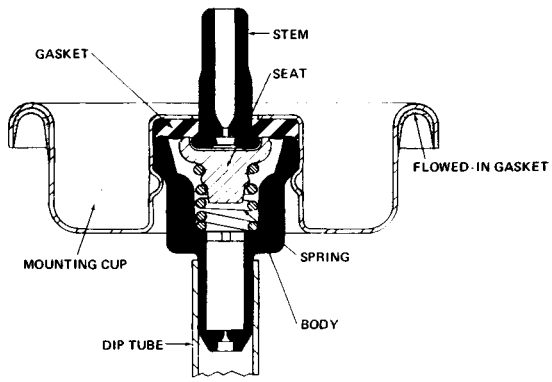

Figure 6. Seaquist PF-71 Toggle Valve Assembly

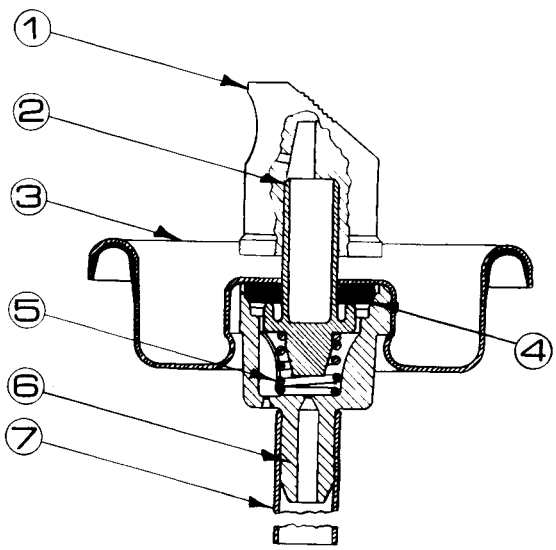

Figure 7. S-63 Tilt Valve by Summit Packaging Systems

Some valve makers illustrate specific valves with pictorial cross-sectional views, as shown for the popular Seaquist NS-31 valve in Figure 5.

All valve makers provide easy-to-understand drawings of how their valves operate, as illustrated for the Precision Model 1-NN valve in Figure 8.

In some instances, information is presented on various means of gassing the valve, showing the propellent pathways through and/or around specific models during production injection operations. For the specifications writer, the quality assurance person, engineers and others, all the valve manufacturers are able to supply detailed engineering drawings of their various components and finished assemblies upon request, as well as to provide answers to nearly all inquiries.

The Toggle Action Aerosol Valve

At least two U.S.A. manufacturers make what is commonly termed a toggle action or tilt action valve as differentiated from the vertical action or reciprocating varieties. These are the Seaquist Valve Company and Summit Packaging Systems, Inc. In addition, the long-stem valves made by the Clayton Corporation and the Super-Whip Valve Manufacturing Company for foam products technically fit into this general category.

As a rough estimate, toggle action valves of the sprayhead type probably account for 10 to 15% of the U.S.A. aerosol volume. They have excellent directionally characteristics, a factor which appears to be quite important to consumers. In addition, they have a very light and comfortable actuating force that is not available with the reciprocating or vertical action valves. In the vertical types, the consumer must press down with from 3 to 6 pounds (1.4 to 2.7 kg) of direct downward force to counteract the spring pressure plus the propellent pressure in the dispenser. In fact, for CO_2 packs and other higher pressure packs, the actuating force may reach over 8 pounds (3.6 kg). In the toggle action valves, the consumer employs a sideways force to depress the seat and spring at one side until the seal between seat and stem gasket is opened and product flow can occur. The theoretical mechanical advantage is in the order of five to ten, offset by gasket compression and some other factors, but this means that the valve is very easy to operate, even for long periods of time. A typical toggle valve is illustrated as the Seaquist Valve Company's PF-71 Aerosol Valve Assembly; Figure 6. This may be compared with the Summit

Packaging Systems, Inc. S-63 tilt valve, shown in Figure 7.

Both the Seaquist PF-70 series valves and the Summit S-63 valvess are designed for very fast pressure filling, regardless of any body restrictions. The high rate of fill is possible because the propellent passes around the body and into the head space, with only an incidental amount traveling through the body. This feature helps to minimize "dip tube whip", which sometimes acts to bind the dip tube against the concave can bottom at a point inconsistant with the button orientation. By gassing with the button on, tipping and possible hand orientation operations by the filler are avoided.

In order to gas with buttons on, the actuator should be made smaller in diameter than the valve pedestal. This prevents "hang up" of the button in the case of adapters designed to seal around the periphery of the pedestal by the mechanical compression of an "O"-ring. Where a slightly wider diameter button is required for some reason, the valve can still be gassed with the buttons on, but in this case the adapter will require a rubber boot that is designed to seal against the floor of the mounting cup. Much more gas loss will occur in this arrangement when the gassing head lifts off the container. For gassing purposes, the button and valve stem can be depressed vertically by the liquistatic pressure of the propellent, but better weight control and less gas loss will occur if the adapter is designed to make the seal, mechanically depress the button (allowing the valve to gas), release the button and then break the seal. Proper design of adapters is a major factor in good gassing operations, and many of those now available are known to have design features that can be improved significantly.

Toggle action valves are useful with a wide range of products, and are particularly desirable where misdirection of the spray is a problem to be particularly avoided. In the case of an underarm product, misdirection could cause a consumer to spray the face or eyes. In the special case of high-solvency products, such as those

Figure 8. Diagrams Showing Valve Action in Open and Closed Positions

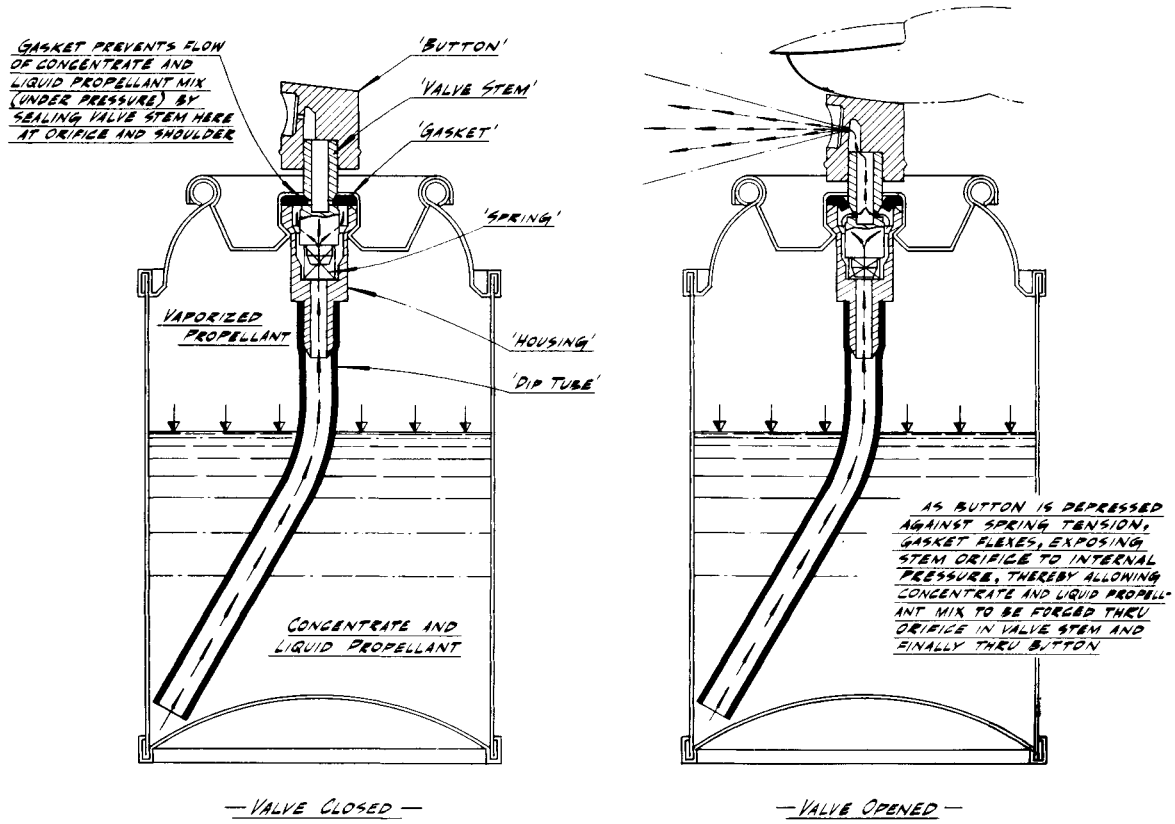

Courtesy Precision Valve Corporation

TABLE VII

Compilation of Seaquist Valve Company Valve Series and Basic Assemblies

NS-20 Series	0.158" stem diameter, for interchangeability with overcaps and spouts.
NS-21	Standard dip tube
NS-24	Capillary dip tube
NS-26	Spray Anyway (Sprays upright or inverted)
NS-28	Jumbo dip tube
NS-29	Double slot body (Tubeless, for bag-in-can or piston can uses)
NS-30 Series	0.125" stem diameter, most popular, widest diversity of stems & actuators.
NS-31	Standard dip tube
NS-34	Capillary dip tube
NS-36	Spray Anyway
NS-38	Jumbo dip tube
NS-39	Double slot body
NS-40 Series	0.125" stem diameter, self-cleaning seal, especially good for powders.
NS-41	Standard dip tube
NS-44	Capillary dip tube
NS-46	Spray Anyway
NS-48	Jumbo dip tube
NS-49	Double slot body
ST-70 Series	Toggle action, good directionality, positive shut-off & high sealing force.
ST-71	Standard dip tube
ST-74	Capillary dip tube
ST-78	Jumbo dip tube
St-79	0.107" (Tubeless) (For bag-in-can or piston can uses)
PF-30 Series	Like the NS-30, but body moves to allow very rapid pressure filling, both through and around the assembly.
PF-31	Standard dip tube
PF-34	Capillary dip tube
PF-40 Series	Like the NS-40, but body moves to allow very rapid pressure filling, both through and around assembly. Self cleaning seal for powders.
PF-41	Standard dip tube
PF-44	Capillary dip tube
PF-70 Series	Toggle action, like the ST-70, but body moves to allow very rapid pressure filling both through and around assembly.
PF-71	Standard dip tube
PF-74	Capillary dip tube
PF-78	Jumbo dip tube
PF-79	0.107" (Tubeless) (For bag-in-can or piston can uses)
SF-80 Series	Female valve assembly. Accepts only the 0.125" nominal stem. Fast gassing.
SF-81	Standard dip tube
SF-84	Capillary dip tube
AR Series	Female valve assembly. Accepts the 0.135" nominal stem. Fast gassing.
AR-71	Standard dip tube
AR-74	Capillary dip tube

Note: The KN series vertical-acting valve and PARC powder valve, acquired from Ethyl Corporation in 1981 are no longer available.

with large percentages of methylene chloride or toluene, toggle action valves may give problems of weight loss or actuation due to stem gasket swelling and other effects. If toggle action valves are considered for such formulations, they should be checked most carefully for compatibility, and the valve manufacturer consulted for technical advice and assistance.

The Clayton and Super-Whip valves are used almost exclusively on whipped cream products. Some years ago they were also used on shaving creams. However, foam spouts were developed that covered the entire mounting cup, and did not require can inversion to operate. These spouts provided a total valve system that was less expensive than the "stalk-type" valves, which were gradually displaced. In fact, two manufacturers of this type valve have closed and another has added a line of tilt-action valves.

Avoset Food Corporation (Oakland, CA) provides an interesting, stemless type valve for whipped cream products—many of which they fill, for themselves and others—which is particularly adaptable to sterile filling applications. Their Model 201SS valve has a lever actuator as one option, a stainless steel body and a mounting cup with a proprietary flowed-in gasket. The stem sealing gasket is held tightly against the stem hole in the cup by means of a stainless steel leaf spring fitted into the cup at both ends, because of a special folded contour at the periphery of the cup base. The various actuators carry a dispensing pin designed to depress the leaf spring to allow the seal to part and the product to emerge. The valve does not use a dip tube and is operated with the container inverted.

The technology of the mounting cups, elastomers, dip tube, spring and certain other parts of the toggle action valves was discussed under the heading of vertical acting valves.

The Female Aerosol Valve

The female valve design has been an important factor in the aerosol industry for over 30 years. It is made in the U.S.A. by at least three major valve suppliers: Newman-Green, Inc., Seaquist Valve Company and Summit Packaging Systems, Inc. It is characterized by having the valve stem contiguous with and an integral part of the actuator. The mounting cup thus has a hole in the center, leading down into a gasket-lined cavity with the valve seat at the bottom. The stem is inserted into this hole and then depressed vertically to actuate the valve. An expanded view of the components used

for such valves is illustrated for the Summit CA-78 Female Valve, shown in Figure 9.

The female valve is a well-designed efficient valve, eminently suitable for a number of specific applications such as dispensing paints and coatings. It is normally gassed by T-t-V methods with the buttons off, or by U-t-C with the buttons on. T-t-V gassing is extremely high speed, due to the absence of a stem orifice restriction and the usual absence of any tailpiece orifice. Most tailpieces are from 0.060 to 0.093" (1.52 to 2.36 mm) in internal diameter, although this might be reduced by an inserted dip tube in the case of the Newman-Green Model R, R-34 and V-8 series. A significant exception is found in some bodies manufactured by Summit, which include ten Series 65 models with tailpiece restrictions in the 0.013 to 0.030" (0.33 to 0.76 mm) range, some of them also having vapor tap features. Summit also features six bodies with the full 0.060" (1.52 mm) tailpiece, with vapor taps ranging from none to 0.032" (0.81 mm) diameters.

The mounting cup of most female valves has what is known as a roll-over feature at the orifice to reduce or eliminate possible problems during the tipping operation. The metal around the cup orifice is simply rolled upward and then laid back, so that if the delicate end of the actuator stem is not perfectly centered over the hole, it will have a better chance of sliding sideways a bit and then entering normally. In the past, fracture of the stem has been a problem with tipped actuators. In some cases, the fracture was buried in the valve assembly and could not be detected on the production line, letting a defective product get out on the market. In others, an unusual slant to the actuator or some other feature would alert production control people to the problem. With modern refinements in tipping and valve cup design, plus the fact that a large number of female valves are U-t-C gassed, this problem has largely gone away.

Female valve makers offer from two to four stem gasket i.d.s to accommodate the valve to products having different elastomeric swell properties. For example, the Newman-Green Model R Series valves have gasket i.d.s of 0.118, 0.123, 0.128 and 0.132" (0.30, 0.31, 0.33 and 0.34 mm). Most products can use the two smaller i.d. gaskets. Their gaskets are available in either neoprene or buna-N, each in 70 Durometer. When filling formulas capable of elastomeric swelling into containers then sealed with female valves, care should be taken to

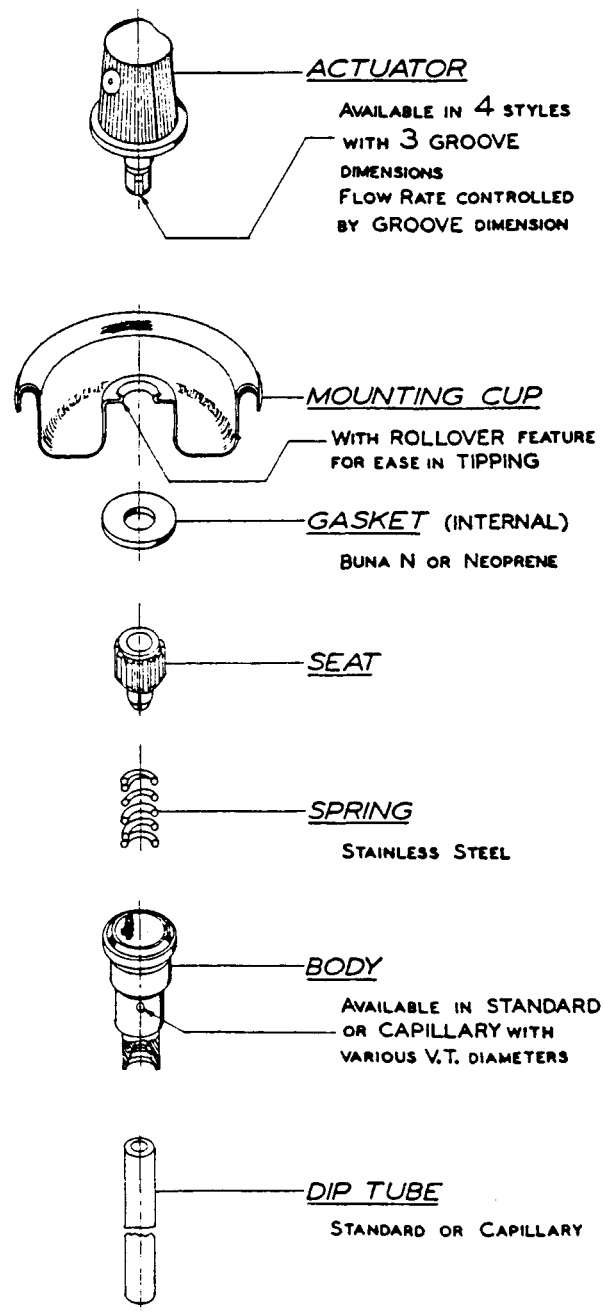

Figure 9. Exploded View of CA-78 Female Aerosol Valve Offered by Summit Packaging Systems, Inc.

insert the sprayhead without delay. In one example, for instance, a carburetor and choke cleaner with a high level of xylene caused such a gross expansion of the gasket, that after a short while the sprayheads could no longer be reliably inserted.

Since the terminal orifice system and the metering slots are both incorporated into the same component, fillers can often inventory just one basic valve and expect to use it for a wide range of applications. For example, Newman-Green provides about 104 sprayheads for their various valves and most are perfectly interchangeable from one basic type to another.

Female valves are particularly desirable for paints, coatings and other products that may tend to dry out in the valve between uses. For other valve styles this might result in clogging, and this can, of course, occur also with the female types. But here the sprayhead can be removed from the rest of the valve and cleaned (sometimes by a brief immersion in lacquer thinner or some other strong solvent), then replaced in order to restore the valve to full operating status. Clogging problems may be reduced by actuator designs, and by means of repeated instructions to the user of paint and coatings products to briefly actuate the dispenser inverted, at the end of spraying, to allow the propellent to help clean concentrate out of the stem and orifices.

A typical female valve assembly is illustrated in Figure 10, showing the Seaquist SF-91 unit. This valve accepts virtually any sprayhead having a 0.135" (3.43 mm) stem diameter.

A companion valve, the Seaquist SF-81, will accept 0.125" (3.18 mm) stem diameters. This allows the Seaquist line of female valves and related actuators to be used interchangeably with conjugate components from other suppliers and also provides for the reverse situation.

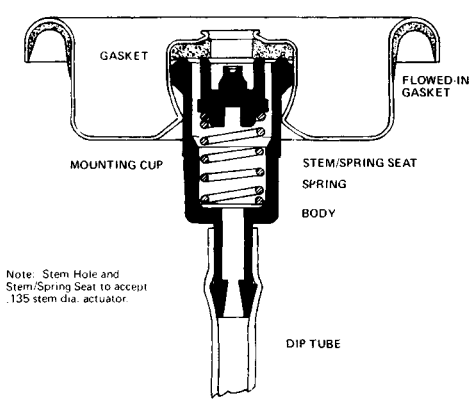

Figure 10. Seaquist SF-91 Female Valve Assembly

Sprayheads for female aerosol valves include both one-piece and two piece models. Some spray out horizontally and others spray upward at 10° or other angles, mainly to avoid the possibility of some slight spray impingement on the rim of the valve cup. The single-piece types have both forward and reversed internal tapers, as well as straight bore orifices, both for spraying and for use with extension tubes. The two-piece sprayheads may be of the mechanical break-up (M.B.U.) type or the non-mechanical break-up type. The Newman-Green Model 166 Series sprayheads are designed to be used with their V-8 Series valve assemblies to produce variable sprays, according to how the button is turned on the seat. Wafer collars of white plastic are available to be oriented and then pressed in place snugly on the valve just below the attached button. They are inscribed with lettering such as, "L—H - Adjust Spray", "L—M—H - Adjust Spray" and "Stream — Spray", and are used for specific mating variable sprayheads and assemblies. For example, one combination will give sprays having a low, medium or high delivery rate, by turning the button to the indicating point on the plastic wafer insert.

A fan type spray is sometimes desired for paints and coatings. Newman-Green has these available in regular size sprayheads with slightly protruding inserts, as well as in a large button size where the o.d. is about 0.92" (23 mm). The large size button, skirted to fill the one-inch (25.4 mm) valve cup, is also available in two-piece Model 181 and 186 Series in at least 38 spray variables.

Ferrule Type Aerosol Valves

During 1982 approximately 40 million glass and plastic-coated glass aerosol units were produced in the U.S.A., and all of them required a ferrule type valve. In addition, at least an equal number of 13 mm and 20 mm aluminum tubes were sold. These also required a ferrule type valve. A much more limited number of straight plastic aerosols were marketed, perhaps a few million, and the valves for these units were often integrated into the plastic top-and-body section. Otherwise, they required a ferrule type valve. Out of this background, the current domestic market for ferrule valves would appear to be in the area of 80 to 100 million units per year, or about a 4% share of the total aerosol business.

These valves are made by the Risdon Manufacturing Company, Emson Research, Inc. and possibly one other U.S.A. firm on a special order basis. Thus the number of manufacturers is strongly down from the seven or so of about ten years ago, as a reflection mainly of the sales decrease in the glass toiletries area.

Ferrule type aerosol valves are made for container finishes of 13, 15, 18, 20 and 32 mm sizes. The ferrule is almost always formed of aluminum and is usually supplied with a gold anodized finish. It replaces the mounting cup of the usual valve, and is attached to the container by a clinching operation, whereby the skirt is tucked under the finish using (generally) a direct inward squeezing operation or (uncommonly) an inward rolling operation. In the first process, a collet with about 16 to 20 tines is placed over the ferrule skirt at a predetermined height. A plunger or mandrel then descends, pinching the ends of the individual tines toward each other, so that they force the skirt of the ferrule inward. If the dimensions are correct, the ferrule, while being pressed inward, will pull downward with considerable force; the top becoming somewhat rounded in the process, but compressing the buna valve gasket very tightly between the top of the container and the flat rim of the ferrule, thus effecting an hermetic seal. The process can be likened to the attachment of caps on beer and beverage bottles.

Because of their diminutive size product uses, valves for bottles and tubes usually have stem orifices in the order of 0.013″ (0.33 mm), so that delivery rates will tend to be less than 0.5 g/s at ambient temperatures. The dip tube is normally an inside fitting capillary type; an i.d. of 0.045″ (1.14 mm) is the most common one in current use. Other i.d.s are available, down to 0.013″ (0.33 mm) in polyethylene. Polypropylene is the most widely used capillary dip tube material, but polyethylene and even nylon may be obtained on special order.

In addition to the standard valves there are also metered valves—sometimes called a meter-spray type. They are designed to dispense a fixed volume of product at each actuation. The dosages available from stock include 40, 50, 67, 80, 100, 150 and 250 mcl (microliters); others may be available on special order, depending upon sales volume. Most metered valves are pressure fillable.

The majority of metered valves operate in the following fashion: when the actuator is depressed, a seal is produced between the metering chamber and the contents of the container. Further depression then opens the metering chamber to the atmosphere via the stem orifice and button. When the actuator is released, the connection of the chamber to the atmosphere is first broken, after which the chamber is connected to the contents via the dip tube. The pressure of the contents is always a combination of propellent and air partial pressures, whereas any liquid entering the metering chamber will only have the pressure of the propellent, plus that of a fraction of the total air, which is dissolved. The pressure differential between all of the air and part of the air is sufficient to cause the product to flow into the chamber and refill it completely. Then also, the warmth of the hand upon the aerosol unit will also cause a bit of extra pressure.

The vast majority of metered valves deliver extremely small dosages, suitable for perfumes, certain pharmaceuticals and drug products. From time to time, valves such as the Risdon Magna-metering type and the Swallowfield macro-metering attachment have appeared and are capable of providing dosages of several grams. In one instance, valves were produced where the plastic metering chamber was about 0.95″ in diameter by 3″ long (24 × 76 mm), and it delivered just about 1.00 fl. oz. (29.57 ml) of product per shot. Such valves are rarely called for but might be available from existing molds and parts on a special order basis.

The earlier metered valves could only be cold-filled, but all the present versions can be pressure loaded by passing propellent into the metering chamber and then out of it into the main content area by means of the liquistatic force of the material, which temporarily opens up an annular rubber seal around the housing, allowing the incoming propellent to by-pass the closed dip tube.

Actuators for ferrule type valves take a number of forms, but most are simple polyolefin cylinders or truncated cones, with a plastic or metallic disc-type insert forming the terminal orifice. Upon occasion the plastic button may be friction fitted into a deep drawn anodized aluminum cup, to give the actuator the elegence of a metallic lustre or shine. Standard and metered valves available from Emson Research, Inc. are illustrated in Figure 11 on Page 176.

These valves are available from Emson Research, Inc. in Bridgeport, CT, or from their facilities at Bredon, Tewkesbury, Glos. in England.

Metered valves for bronchodilator uses are often marketed in conjunction with a large tunnel-like accessory that fits over the spray unit at one end. By depress-

ing a pad at one end of this 2 or 3" (51 to 76 mm) long device, the correct amount of medication is caused to float into the tunnel, from which it can be inhaled by the user.

Many years ago in Europe a meterspray inhalation product was introduced, which consisted of a dilute solution of acetylsalicylic acid (Aspirin active ingredient) and was said to work by rapid absorption into the bloodstream. Extremely low amounts were enough to cure headaches and even migraine attacks, because it could go directly to the seat of the problem with a minimum of dilution and loss. Relief was obtained in a few minutes or less. The product was withdrawn from the market for unknown reasons, but it does point to one more interesting and novel application of the aerosol principle.

Special Components or Accessories

The ingenuity of valve manufacturers and other people in the industry has acted to produce a large number of special purpose components and valve accessories that have increased the scope of aerosol systems. A few are now discussed.

One-Shot Valves

Possibly as much as 1% of the U.S.A. industry relates to products that utilize the entire contents of the can at one time. Individual cans ranging from 2.5 to 7.5 Av. oz. (71 to 213 g) of product are used, for instance, in the indoor insecticide fogger to thoroughly treat a room, or even a small house, ridding it of both crawling and flying insect infestations. A means of latching or locking the valve in an open position had to be found. At first a toggle action valve was used, with a special actuator that operated by pulling the stem sideways to the extent that the other end of the fitment could be latched around the cut edge of the valve cup. The valve was then able to spray the entire can almost vertically into the air and the particle size of the dispensed product allowed it to remain airborne for a considerable time. This device, while generally serviceable, has now been replaced with at least two other actuators.

In one case, a special fitment was produced by the Precision Valve Corporation which locks into the crimping indentations and contains a hinged central pad with a short tube extending over the stem. A small orifice points directly up, over the stem connection. The unit can be sprayed as an ordinary flying insect killer (FIK) by lightly depressing the hinged actuator pad. But if the pad is depressed more fully, it has a lug that can be latched under the surrounding ring, causing the valve to spray continuously. If necessary, the pad can be disengaged by pulling it strongly upward.

A second, quite different approach has been conceived by the Seaquist Valve Company. In this case a 202-diameter (52 mm) overcap is used, with a special depression molded into the center of the top surface.

Figure 11. Standard and Metering Ferrule Type Aerosol Valves By the Emson Research, Inc.

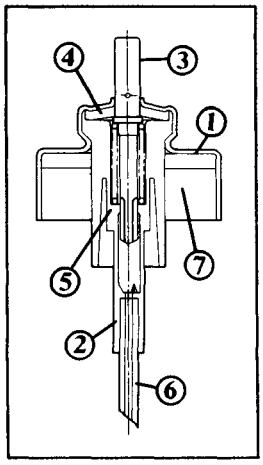

S 13, 15, 18, 20, or 32 mm valve

NO.	PART	MATERIAL
1	Mounting Ferrule	Aluminum (anodized)*
2	Body	High Density Polyethylene
3	Stem	Delrin/Celcon
4	Stem Gasket	Buna*
5	Spring	Stainless Steel (SS302)*
6	Dip Tube	Polypropylene capillary .045" I.D.*
7	Valve Gasket	Buna*

*Others available on request

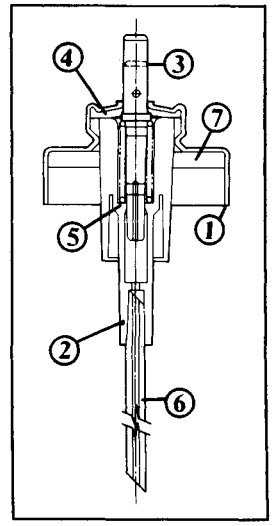

MP 13, 15, 18, 20, or 32 mm valve***

NO.	PART	MATERIAL
1	Mounting Ferrule	Aluminum (anodized)*
2	Body**	High Density Polyethylene
3	Stem	Delrin/Celcon
4	Stem Gasket	Buna*
5	Spring	Stainless Steel (SS302)*
6	Dip Tube	polypropylene capillary .045" I.D.*
7	Valve Gasket	Buna*

*Others available on request
**Dosage available: 40, 50, 67, 80, 100, 150, 250 mcl.
***Pressure fillable

When the overcap is removed and inverted over the valve stem, the depression area fits exactly over the valve cup rim and snaps onto it with peripheral lugs. When this is done, the valve stem is caused to slip into a shallow tube ending in a vertical orifice, and the stem is at the same time depressed so that it actuates. Admittedly the arrangement looks a bit unusual, but it functions very well indeed. It also saves the price of the special actuator by combining it into the overcap.

This single product provides almost the entire market for the one-shot valve. Others may come along, such as fumigants and perhaps certain fire extinguishers, but that is where we are at this time in 1982.

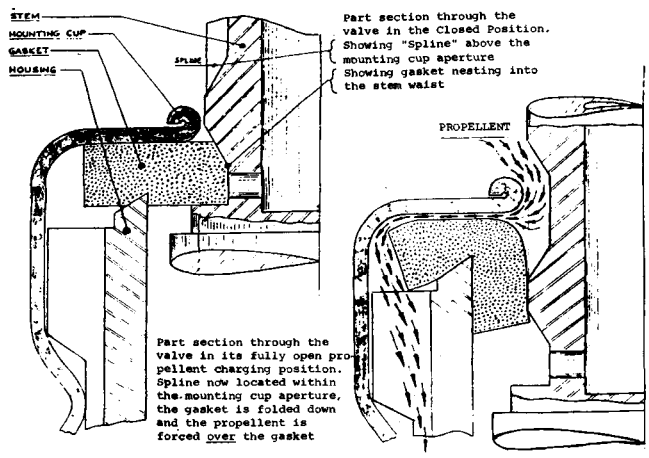

Figure 12. CLF Valve by Metal Box Ltd
Detailed section of the CLF Valve by Metal Box Ltd, England, showing both the closed and open positions of the valve.

The VariSeal Aerosol Actuator

The Essex Chemical Corporation (Mahwah, NJ) has established a VariSeal Group responsible for the marketing of a rather unique variable spray actuator. This device consists of a sprayhead designed to fit on either 0.125 or 0.158″ (3.18 or 4.01 mm) diameter valve stems. It uses a dial to control the spray pattern. The dial fits on a lock nut and extends horiontally from the side of the actuator, just behind the spray orifice. By rotating the dial to the left and thus backing an internal sealing pin out from behind the orifice, the operation is converted from an off position to a fine spray, a medium spray, a coarse spray and finally a stream, during one revolution. The orifice sizes are 0.010, 0.013 and 0.015″ (0.25, 0.33 and 0.38 mm). The invention is patented. Samples can be obtained by writing to the company. The device is illustrated in Figure 13.

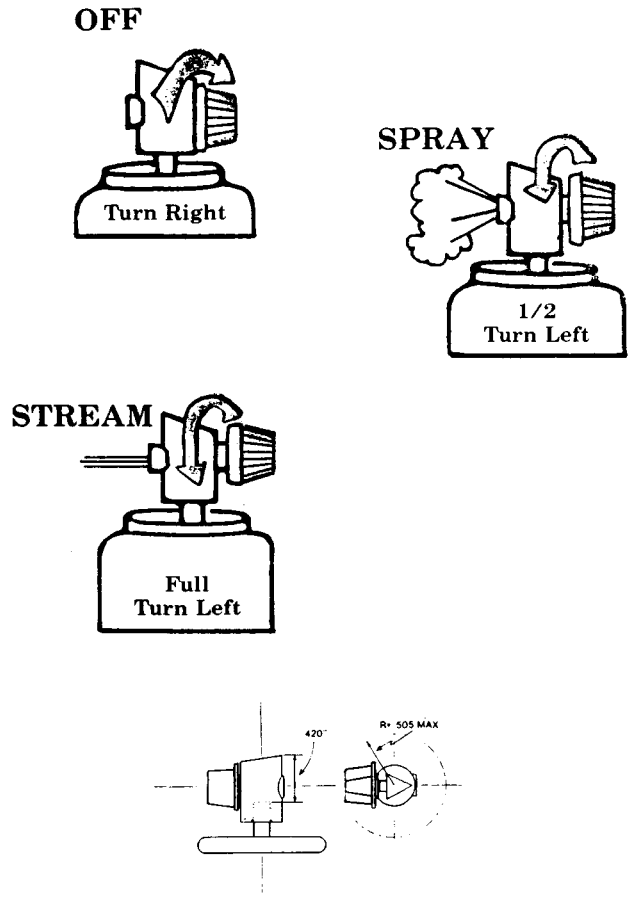

Figure 13. Variable Aerosol Actuator Operation
The illustrations are for the Variseal "Dial-A-Spray" series

The Aquasol and Aquamist Systems

The "Aquasol" dispensing system was introduced by the Precision Valve Corporation in 1974, and a similar system known as the "Aquamist" was developed by the Seaquist Valve Company the following year.

It has been recognized that the total dispersive effect of propellents is never truly used in the aerosol systems. The poorest efficiency is developed with the regular solution system using a straight bore valve orifice. This same solution will provide a finer spray if the sprayhead is converted to a mechanical break-up (M.B.U.) type, and the spray will be finer yet if a vapor-tap valve orifice is added. These sophistications cause the propellent to work harder to produce a spray of greater and greater break-up. The Aquasol and Aquamist valves carry this one step further. They provide maximum break-up with minimum propellent. As the names imply, they

allow the use of water containing formulas, which are always hard to break-up into a finely divided spray pattern. A typical suggestion has involved hydroalcoholic deodorants with 6% active solution, 32% water, 32% ethanol and 30% hydrocarbon propellent. Hair sprays of equivalent composition have been suggested. All these products must be shaken before use, since they exist as two liquid phases. In the meanwhile, aerosol chemists have found that these valve innovations are often successful in producing fine, non-aqueous product sprays with less propellent than before.

The valve of the Aquasol system is a significantly modified vapor-tap, vertical-acting type, where a product stream and a gas stream are caused to enter a valve stem with two vertical passageways leading into a special sprayhead. Separations prevent the gas and product from mixing until they reach a swirl chamber just behind the button insert. At this point they come together at high speeds and mix into what is probably a low density fluid containing millions of tiny gas bubbles of propellent per ml. The degree of mixing is far more efficient than that produced by ordinary vapor-tap designs. An illustration of the upper portion of the stem and of the valve sprayhead is provided in Figure 14.

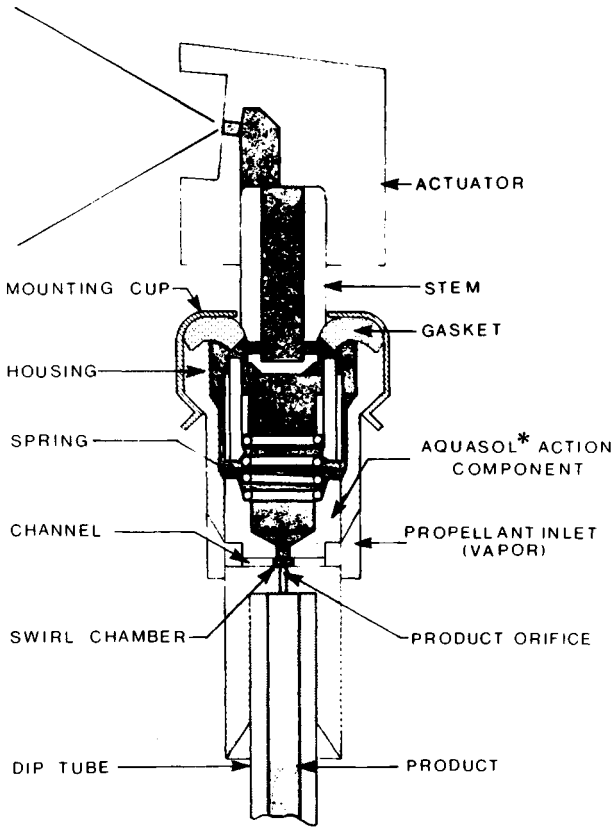

Figure 14. Aquasol Dispenser Stem and Sprayhead
Aquasol is a Tradename of Precision Valve Corporation.

The Aquamist system is similar. Both provide a fine, dry spray with many existing water or solvent-based formulations. By modifying the orifices spray, rates can be adjusted to various levels within a range of 0.2 to 1.2 g/s. Millions of both valve systems have been sold, and the price is now roughly comparable with the cost of regular vapor-tap valves with M.B.U. sprayheads.

Special Applicators

A large variety of special applicators are available for specific uses. Oral applicators for inhalation therapy have been mentioned. Contraceptive foam applicators are also a small but important area. Dental applicators of stainless steel are used to administer anesthetics to gums to deaden the dermal tissues prior to injections. Simple plastic extension tubes are used for lubricants, anhydrous cleaning sprays and silicones — even for woodworms, in the case of one aerosol product.

A product called "Prist" is marketed by PPG Industries, Inc. to provide for the addition of methyl cellosolve to the fuel tanks of certain jet aircraft, at the same time they are being refilled. The material cosolves any small amounts of water that could separate at the bottom of the tank and sometimes provide a breeding ground for certain types of bacteria. If unchecked, these microorganisms could get into the engine and cause jet burn out. To operate the product a 24" (610 mm) length of 0.080" (2 mm) i.d. PVC tubing is fitted with a 0.090" (2.3 mm) tubulature at one end and a metal clip at the other. The tube is connected to the valve button and the clip is attached to the rim of the inlet pipe of the fuel tank. A complete mixing action results when the aerosol and jet fuel hose are actuated simultaneously into the tank.

A similar delivery tube is sold by Chemtronics Inc. (Hauppauge, NY) as their "Vibra-Jet" Aerosol Pulsating Device. It consists of a polypropylene 0.090" (2.3 mm) connector to the valve button, attached to a 26" (660 mm) section of 0.080"(2 mm) i.d. polyurethane tubing, which in turn is attached to a 5.50" (140 mm) section of 3.5 mm i.d. polyurethane tubing on the outside and a 17 mm stub of 0.090" (2.3 mm) PP tube on the inside, making a three-ply joint. At the end of the large tube there is a similar junction to accommodate a 7" (178 mm) length of the 0.090" (2.3 mm) PP tubing.

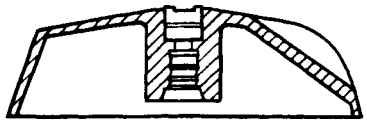

Figure 15. Two-Piece Specialty Actuators
Three actuator slots are available for the S-64 Tilt Valve by Summit Packaging Systems, Inc.

When used in conjunction with a Solvent TF ($CCl_2F.CF_2Cl$) or 1,1,1- trichloroethane ($CH_3.CCl_3$) type aerosol cleaner and degreaser spray the device provides a pulsing or vibrating "solvent impact" action that dislodges hard-to-remove contaminants, penetrates surface pores and improves overall cleaning, lubrication, moisture displacement and other desired effects.

Unusual actuators are sold by several valve companies. For rug shampoos, certain garden sprays and other products which are applied with the dispenser inverted, Precision provides their 01-06 Series "Satellite" version and Summit has a similar #72304 Series in three slotted fan-spray models for their S-63 tilt-valve. These actuators are about 1.5"(38 mm) in diameter and have a press pad. The Summit design is illustrated in Figure 15 on this page.

Other inverted-use actuators include the Summit #70039 open tire actuator, #72500 nylon open foam spout and #70059 PP vertical spray head with 0.020"(0.51 mm) M.B.U. insert.

Both Seaquist and Precision offer aerosol valve filters that are integral with the tailpiece section of the valve body. The Seaquist filter is provided only for their popular NS-31 valves. These filters can hold back foreign particles down to 0.002" (0.05 mm) in mean diameter, such as cardboard fibres, lint and certain insoluble materials which occasionally form in the container as the concentrate ages or as tolerable amounts of corrosion products develop. The Seaquist 262 mesh nylon filter is sonically welded to the bottom of the valve body. The use of filters may be contraindicated for moderately viscous products if they impede the flow into the body to an undesirable degree.

An interesting valve accessory has been developed by Tor Petterson Associates (Rancho Palos Verdes, CA) called the CliXon system. It is designed to replace electrically operated timed aerosol dispensers which produce a brief spray every so often until the container becomes empty. The invention centers around a cup-like affair containing a permeable barrier. Product enters the lower area through the stem of an actuated valve and passes slowly through the membrane to pressurize the upper area. When a sufficient pressure has been attained a concave disc everts, thereby opening an aperture to release the pressure. Once the pressure has dissipated, the disc reverts to its original shape and closes the orifice. The operation is illustrated in Figure 16 below.

The company states that models developed thus far have been able to dispense the contents of a typical 16 oz. (454 g) container in time periods ranging from several minutes to several months. Discharge intervals extend from one second to six hours. The amount of product dispensed ranges from a few mg to about one g. To our knowledge, products incorporating this invention are not yet on the market. Modifications include the Pulsair (for high precision) and the Pulsmatic (for industrial uses).

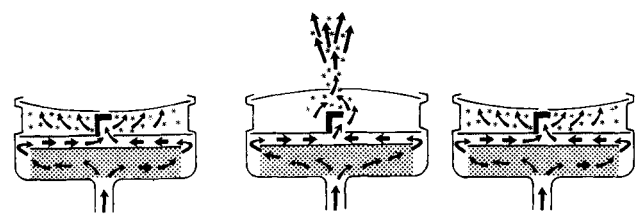

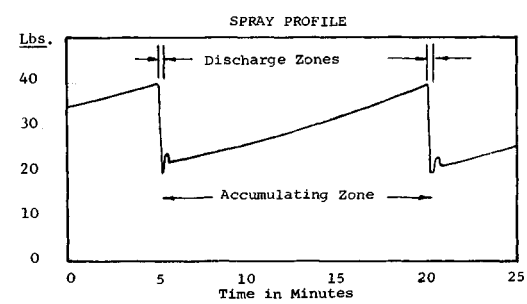

Figure 16. CliXon Dispensing Cycle, Also A Spray vs. Time Profile

Valves for Antiperspirants, Body Powders and Powder Type Spot Removers

PRECISION VALVE CORPORATION

Actuator	01-6280	0.020″	01-6380	0.020″
Stem	04-0562	0.024″ ringed	04-0801	2 × 0.020″
Body	07-3468	0.062″ × 0.025″ VT	07-3478	0.062″ × 0.030″ VT
Stem Gasket	05-0320	Low durometer	05-0301	Low durometer
Mounting Cup	12-8700	Conical, lipped & eponed	12-8600	Conical, lipped & eponed
Dip Tube	09-3520	0.050″ capillary	09-3520	0.050″ capillary
Spring	06-6044	0.020″ stainless steel	06-0101	0.023″stainless steel

SEAQUIST VALVE COMPANY (author's suggestion)

Model No.	NS-31
Actuator	0.020″ two-piece
Stem	2 × 0.018″ Acetal - pink
Body	0.025″ VT acetal - yellow
Stem Gasket	Buna, Shore A Durometer of 75
Mounting Cup	Flat, dimpled. 0.75# ETP epoxy-coated t/b.
Dip Tube	0.050″ capillary
Spring	0.020″ stainless steel

SUMMIT PACKAGING SYSTEMS, INC.

Model No.	SV-73 (Vertical)
Actuator	0.019″ RT 824000 or 0.020″ST 821000 or 0.020″ STD 807000
Stem	0.020″ 101007
Body	0.062″ RE × 0.025″ VT 439001
Stem Gasket	0.050″ Buna B50000
Mounting Cup	0.063″ Flat Epoxy Bottom 025011
Dip Tube	0.042″ i.d. Capillary 65061-0208
Spring	0.034″ stainless steel 634000

Valves for Hair Sprays and Personal Deodorants

PRECISION VALVE CORPORATION

Actuator	01-1406	0.018″ FT	21-8541	0.013″ MB concave BOF*
Stem	04-1215	0.016″	04-1220	0.018″
Body	07-0020	0.025″ × 0.013″ VT	07-0093	0.020″ × 0.016″ VT
Stem Gasket	05-0310	Buna N	05-0330	Neoprene
Mounting Cup	12-8700	Conical, lipped & eponed	12-8700	Conical, lipped & eponed
Dip Tube	09-2010		09-2010	
Spring	06-6010	Stainless Steel	06-6010	Stainless steel

*Alternately, 01-5008 0.016″MBST

SUMMIT PACKAGING SYSTEMS, INC.

Model No.	SV-73 (Vertical)	S-63 (Tilt)
Actuator	0.016″ STD 854000	0.016″ MB Disc 70001-0020
Stem	0.016″ 101005	0.013″ 63009-0004
Body	0.020″ RE × 0.013″ VT 239016	0.016″ RE × 0.016″ VT 63001-0066
Stem Gasket	0.050″ Buna B50002	0.058″ Neoprene 63000-0580
Mounting Cup	0.102″ Flat, plain 033010	0.063″ Flat, epoxy bottom 63000-0410
Dip Tube	Standard 200000	Standard 200000
Spring	0.033″ stainless steel 633000	0.023″ stainless steel 65003-0005

Note: For both Precision and Seaquist the second column selections are preferred for personal deodorants or rather dry hair sprays.

Valves for Cleaners, Starches and Polishes

PRECISION VALVE CORPORATION

Actuator	01-8708	0.016″ MBST (light spray)	01-5008	0.016″ MBST (light spray)
	01-8718	0.020″ MBST (heavy spray)	01-5018	0.020″ MBST (heavy spray)
Stem	04-8673	2 × 0.020″ (recessed taper)	04-1270	2 × 0.020″
Body	07-1901	0.080″	07-1901	0.080″
Stem Gasket	05-0310	Buna N	05-0310	Buna N
Mounting Cup	12-8700	Conical, lipped & eponed	12-8700	Conical, lipped & eponed
Dip Tube	09-2010		09-2010	
Spring	06-6010	Stainless steel	06-6010	Stainless steel

SUMMIT PACKAGING SYSTEMS, INC.

Model No.	SV-73 (Vertical)	S-63 (Tilt)
Actuator	0.016″ MB 900101	0.016″ MB 70055-0003 or -0014
Stem	0.025″ 105001	0.030″ 63011-0004
Body	0.062″ RE 239000	0.062″ RE 63000-0066
Stem Gasket	0.050″ Buna B50002	0.058″ Buna 64000-0019
Mounting Cup	0.130″ Flat, epoxy t/b 040013	0.063″ Flat, epoxy t/b 63000-0412
Dip Tube	Standard 200000	Standard 200000
Spring	0.033″ Stainless Steel 633000	0.023″ Stainless Steel 65003-0005

Suggested Valves for Various Products

Some valve manufacturers list suggested specific valve combinations for various standard aerosol products. They should be regarded as starting points, since each marketer may have his own unique ideas about what constitutes an acceptable spray pattern. A large degree of supplier interchangeability can be managed by maintaining the same orifices, gaskets and other attributes during the development of alternate or second-source valve specification.

It would be too space consuming to list valve possibilities for large numbers of aerosol products, but three have been selected for examples. They include (a) the antiperspirant, body powder and spot remover type, (b) the hair spray and personal deodorant type, and (c) the cleaner, starch and polish type.

The dip tube lengths for the valve suggestions on these pages can be determined roughly by reference to Table VIII on page 174. In all cases the dip tube length should be confirmed by making tests in the proposed formula.

The bottom of the can may be perforated and then removed to check the dip tube for any length adjustments due to swelling or possibly shrinking in the product. When ordering dip tubes any notched or bias cut ends should be specified, if these are desired.

It is suggested that technical service personnel at the valve companies be consulted to determine optimum product assembly.

Future

The wealth of innovations that have characterized the valve making industry in the past may logically be expected to continue into the future. For example, the Precision Valve Corporation has recently developed a stem orifice system that permits a faster delivery rate valve than they had previously. The company has also started using their "Density Pack" technique of vibrating an extra 50% or so valves into standard cases. Thus a typical 2000-pack box can be made to hold 3000 valves. Boxes currently cost just about $1.00 each, so the cost savings from this aspect alone would amount to $0.17/M in the example mentioned. Consideration is being given to bulk-pack collapsible containers, sized to fit on standard pallets. These could be returnable.

New button styles are under development, including some radically different types which are still in the confidential stage, while patent positions are being pursued. Many of the newer sprayheads can be expected to be slightly larger at the top than at the base, to facilitate rapid removal from multi-cavity molds. Even the spring is under study. A process for rough chromium plating of steel springs is being considered as an alter-

nate to the use of SS-302 , SS-316 or Nitronic-50 steels. In fact, at least two valve manufacturers have active programs underway to eliminate the coil spring entirely for some product types. The new designs would allow the base of the stem to expand a funnel-like split hollow cone of a specific plastic, spreading it reversibly. The resiliency of the thin plastic chives would cause the stem to return upward after use.

There are many other programs underway. Some relate to the inward clinching or rolling attachment of special valve cups to the top finish of OPET and other plastic type aerosol bottles up to 50 cu. in. (793 ml) in size. Others are still confidential and cannot be described at this time. In summary, the industry can anticipate the continuation of a high level of innovation from the valve makers in the future.

TABLE VIII *CSMA "A-D Dimension" Chart for Suggested Dip Tube Lengths*

Can Size	Nominal Fill	C.S.M.A. Standard	Standard (mm)	C.S.M.A. Jumbo (in.)	Jumbo (mm)
202x200	2 oz.	2 12/32"	60.	—	—
202x214	3 oz.	3 10/32"	84.	3 6/32"	81.
202x314	4 oz.	4 6/32"	106.	4 2/32"	103.
202x406	6 oz.	4 26/32"	122.	4 20/32"	117.
202x509	8 oz.	5 28/32"	149.	5 24/32"	146.
202x700	9 oz.	7 10/32"	186.	7 8/32"	184.
202x708	10 oz.	7 24/32"	197.	7 20/32"	194.
Spratainer	6 oz.	4 20/32"	118.	4 16/32"	114.
Spratainer	12 oz.	4 24/32"	121.	4 20/32"	117.
207.5x509	12 oz.	6 4/32"	156.	6	152.
207.5x605	14 oz.	7 2/32"	179.	6 30/32"	176.
207.5x701	16 oz.	7 26/32"	198.	7 22/32"	195.
207.5x708	16 oz.	8 8/32"	210.	8 4/32"	206.
211x413	12 oz.	5 16/32"	140.	5 14/32"	138.
211x604	16 oz.	6 30/32"	176.	6 28/32"	175.
211x612	18 oz.	7 16/32"	191.	7 14/32"	189.
211x713	20 oz.	8 12/32"	213.	8 10/32"	211.
300x709	24 oz.	8 6/32"	208.	8 4/32"	206.

Aluminum Tube Size	Nominal Fill	C.S.M.A. Standard (in.)	Standard (mm)	C.S.M.A. Jumbo (in.)	Jumbo (mm)
1¼x4¾"	2.5 oz.	4 26/32"	122.	4 24/32"	121.
1⅜x2½"	1.75 oz.	2 14/32"	62.	2 12/32"	60.
1⅜x3"	2 oz.	3"	76.	2 30/32"	75.
1⅜x3 13/16"	2.5 oz.	3 24/32"	95.	3 22/32"	94.
1½x3 11/16"	2.8 oz.	3 20/32"	92.	3 18/32"	90.
1½x4 3/16"	3.3 oz.	4 4/32"	105.	4 2/32"	103.
1½x4 11/16"	3.8 oz.	4 20/32"	117.	4 18/32"	116.
1½x5"	4 oz.	4 28/32"	124.	4 26/32"	122.
1½x5 5/16"	4.3 oz.	5 12/32"	137.	5 10/32"	135.
1½x5⅞"	4.5 oz.	5 30/32"	151.	5 28/32"	149.
1½x6½"	5 oz.	6 16/32"	165.	6 14/32"	164.
1¾x4½"	4.9 oz.	4 14/32"	113.	4 12/32"	111.
1¾x5½"	5.9 oz.	5 16/32"	140.	5 16/32"	140.
1¾x6½"	7.0 oz.	6 16/32"	165.	6 14/32"	164.
2.089x4 11/16"	6.8 oz.	4 24/32"	121.	4 22/32"	119.
2.089x5½"	8.2 oz.	5 16/32"	140.	5 14/32"	138.
2.089x6"	9 oz.	6 2/32"	154.	6"	152.
2.089x6½"	9.7 oz.	6 16/32"	165.	6 14/32"	164.

Courtesy of Precision Valve Corporation.